SCAFCO STEEL STUD MANUFACTURING CO.
2800 E. Main Ave.
P.O. Box 3949
Spokane, Washington 99220
(509) 343-9000
www.SCAFCO.com

ADDITIONAL MANUFACTURERS

Quail Run Building Materials
2102 W. Lone Cactus Drive
Phoenix, AZ 85027
(602) 269-2316
www.qrbm.com

United Metal Products
234 North Sherman Avenue
Corona, CA 92882
(951) 739-9535
www.unitedmetalproducts.info

Consolidated Fabricators Corp.
8584 Mulberry Ave.
Fontana, CA 92335
(909) 770-8920
http://www.con-fab.com/

Telling Industries, LLC
1050 Kennedy Road
Windsor, CT 06095
www.tellingindustries.com

Telling Industries, LLC
2105 Larrick Rd.
Cambridge, OH 73725
www.tellingindustries.com

Telling Industries, LLC
1400 Southwire Drive
Osceola, AR 72370
www.tellingindustries.com

Telling Industries, LLC
1200 W Martin Luther King Blvd.
Plant City, FL 33563
(440) 974-3370
www.tellingindustries.com

Steel Construction Systems
11250 Astronaut Boulevard
Orlando, FL 32837
www.steelconsystems.com

SLOTTED STEEL TRACK FOR INTERIOR AND EXTERIOR WALLS (SLT, SDLT) AND SEISMIC DRIFT TRACK FOR INTERIOR AND EXTERIOR WALLS (D, DD)

CSI Section:
05 40 00 Cold-Formed Metal Framing

1.0 RECOGNITION

SCAFCO Slotted Track recognized in this report has been evaluated for use in supporting steel wall framing. The structural performance properties of the Slotted Track comply with the intent of the provisions of the following codes and regulations:

- 2018, 2015, and 2012 International Building Code® (IBC)
- 2019 California Building Code (CBC) – Supplement attached

2.0 LIMITATIONS

Use of the SCAFCO Slotted Track recognized in this report is subject to the following limitations:

2.1 Installation shall comply with the applicable code, this report, and the manufacturer's instructions. In the event of a conflict between the applicable code this report, and the manufacturer's instructions, the more restrictive governs.

2.2 Load reactions resulting from the wall heights shall be checked with the allowable loads as listed in Tables 1A and 1B of this report.

2.3 The steel framing shall have a minimum of G40 galvanization for use in walls where the loading conditions allow for the use of non-structural framing in accordance with Section 3.2.2 of this report, and a minimum of G60 galvanization for use in walls where the loading conditions require structural framing.

2.4 The minimum steel thickness of the Slotted Deflection Track and Seismic Drift Track, as delivered to the job site, shall be at least 95 percent of the design thickness as specified in Tables 2A, 2B, 3A, or 3B of this report.

2.5 The tracks are manufactured at the facilities noted in this report with inspections by IAPMO Uniform ES.

The product described in this Uniform Evaluation Service (UES) Report has been evaluated as an alternative material, design or method of construction in order to satisfy and comply with the intent of the provision of the code, as noted in this report, and for at least equivalence to that prescribed in the code in quality, strength, effectiveness, fire resistance, durability and safety, as applicable, in accordance with IBC Section 104.11. This document shall only be reproduced in its entirety.

Copyright © 2025 by International Association of Plumbing and Mechanical Officials. All rights reserved. Printed in the United States. Ph: 1-877-4IESRPT • Fax: 909.472.4171 • web: www.uniform-es.org • 4755 East Philadelphia Street, Ontario, California 91761-2816 – USA

2.6 Slotted Deflection Track and Seismic Drift Track may be used in fire-resistance-rated assemblies when data complying with IBC Sections 703 or 715 is submitted to and approved by the building official.

3.0 PRODUCT USE

3.1 Slotted Deflection Track (SLT and SDLT): The Slotted Deflection Tracks are recognized for use at non-load bearing head of wall interior and exterior conditions capable of allowing for vertical movement of the primary structure while isolating the cold-formed steel framing and providing resistance to applicable transverse loads in compliance with Sections 2210.1 and 2508 of the IBC.

3.1.1 Standard Slotted Track (SLT) Expansion Joint System: The SLT Slotted Deflection Track provides for positive attachment of the vertical wall stud to the top track through the slots and accommodates the vertical movement of the primary structure. The SLT is designed to allow a total vertical movement of 1½ inches (± ¾ inch) [38.1 mm (± 19.1 mm)].

3.1.2 Deep Leg Slotted Track (SDLT) Expansion Joint System: The SDLT Slotted Deflection Track provides for positive attachment of the stud to the top track through the slots and accommodates the vertical movement of the primary structure. The SDLT is designed to allow a total vertical movement of 2 inches (± 1 inch) [50.8 mm (± 25.4 mm)].

3.2 Seismic Drift Track (D and DD): The Seismic Drift Track is recognized for use at non-load bearing head of wall interior and exterior conditions capable of allowing for vertical movement and lateral drift of the primary structure while isolating the cold-formed steel framing and providing resistance to applicable transverse loads in compliance with Sections 2210.1 and 2508 of the IBC.

3.2.1 Standard Seismic Drift Track (D) Expansion Joint System: The D Seismic Drift Track provides for positive attachment of the stud to the top track through the slots and accommodates the vertical movement of the primary structure; and is attached to the structure through the Drift Insert (DI) and allows for lateral drift of the primary structure. The D is designed to allow a total vertical movement of 1½ inches (± ¾ inch) [38.1 mm (± 19.1 mm)] and total lateral movement of 4 inches (± 2 inch) [101.6 mm (±50.8 mm)].

3.2.2 Deep Leg Seismic Drift Track (DD) Expansion Joint System: The DD Seismic Drift Track provides for positive attachment of the stud to the top track through the slots and accommodates the vertical movement of the primary structure; and is attached to the structure through the Drift Insert (DI) and allows for lateral drift of the primary structure. The DD is designed to allow a total vertical movement of 2 inches (± 1 inch) [50.8mm (±25.4 mm)] and total lateral movement of 4 inches ± 2 inch) [101.6mm (±50.8 mm)].

3.3 Design:

3.3.1 General: The section properties provided in Tables 2A, 2B, 3A, and 3B of this report have been determined in accordance with the AISI S100. Allowable Stress Design (ASD) loads and wall heights shall comply with Tables 1A or 1B of this report.

3.3.2 Nonstructural Framing: For the purpose of this report, members that are to be used as nonstructural shall comply with the limitations of Section A2 of AISI 220, or AISI S200, as applicable. Under these conditions, tracks are permitted to be produced from steel with a G40 galvanization coating designation. The nonstructural framing members may be used in nonload-bearing walls as defined in IBC Section 202, whichever loading condition is more restrictive.

3.3.3 Slotted Deflection Track (SLT and SLDT) – Track to Structure Connection: The web of the Slotted Deflection Track shall be attached to the structure above using approved fasteners. The attachment of the track to the structure shall be designed in accordance with applicable provisions of the IBC by the registered design professional to withstand the allowable loads applied to the connection. Fasteners shall be suitable for connecting the steel and the support material and shall be spaced as required by design, but not more than 24 inches (610 mm) on center.

3.3.4 Slotted Deflection Track (SLT and SLDT) – Stud to Track Connection: The wall studs shall be placed in the track and cut short of the wall height to provide a gap between the top of the stud and the web of the track. The gap shall be large enough to allow for the designed vertical movement, while also allowing enough material to provide attachment of the stud. The screws are to be fastened through both sides of the Slotted Deflection Track into each flange of the wall stud using the appropriate fastener as described in Section 4.3 of this report. The fasteners are to be attached through the center of the slot provided in the leg of the track and installed in compliance with Section B1.5.1 of AISI S240, or Section D1 of AISI S200, as applicable. Figures 1A and 1B of this report depict the proper stud to track connection configuration.

3.3.5 Seismic Drift Track (D and DD) – Track to Structure Connection: The web of the Slotted Deflection Track shall be attached to the structure above using approved fasteners through the Drift Insert DI. The Drift Insert DI is 0.068-inch (1.727 mm) -thick and extrudes through the material of the Slotted track. The attachment of the track to the structure shall be designed in accordance with applicable provisions of the IBC by the registered design professional to withstand the allowable loads applied to the connection. Fasteners shall be suitable for connecting the steel and the support material and shall be spaced as required by design, but not more than 24 inches (610 mm) on center. Figure 2C of this report details the DI dimensions.

3.3.6 Seismic Drift Track (D and DD)– Stud to Track Connection: The wall studs shall be placed in the track and cut short of the wall height to provide a gap between the top of the stud and the web of the track. The gap shall be large enough to allow for the designed vertical movement, while also allowing enough material to provide attachment of the stud. The screws are to be fastened through both sides of the Seismic Drift Track into each flange of the wall stud using the appropriate fastener as described in Section 3.3. The fasteners are to be attached through the center of the slot provided in the leg of the track and installed in compliance with Section B1.5.1 of AISI S240, or Section D1 of AISI S200, as applicable Figures 2A and 2B of this report depict the proper stud to track connection configuration.

4.0 PRODUCT DESCRIPTION

4.1 Product Information: The slotted deflection tracks are factory cold-formed steel members from coils of steel as outlined in Section 4.2 of this report.

4.2 Material Information: The framing members described in this report are factory cold-formed from hot-dipped galvanized steel. Steel with thicknesses of 18 mil (D20), 22 mil (30EQD), 28 mil (33EQS) and 38 mil (43EQS) conform to SSFSA's SS101-13 published specification for steel with minimum yield strength (F_y) of 57 ksi and a minimum tensile strength (F_u) of 65 ksi. Steel with a 33 mil and 43 mil thicknesses conform to ASTM A653 SS Grade 33 steel with thicknesses of 54 mils, 68 mils and 97 mils conform to ASTM A653 SS Grade 50. These thicknesses are the minimum steel thicknesses delivered to the job site and shall be a minimum of 95 percent of the design thickness listed in Tables 2A and 2B of this report. The framing members have a minimum G40 or G60 galvanization coating designation depending on use in accordance with ASTM A653.

4.2.1 Standard Slotted Track (SLT): The SLT section is a cold-formed U-shaped channel which consists of two slotted flanges, perpendicular to the web, formed from cold-formed sheet steel as described in Section 4.2 of this report. The SLT sections are fabricated to nominal web widths of 2½, 3½, 3⅝, 4, 6, and 8 inches (63.5, 88.9, 92.1, 101.6, 152.4, and 203.2 mm). The sections are formed from steel having design thicknesses of 0.0188, 0.0235, 0.0295, 0.0346, 0.0400, 0.0451, 0.0566, 0.0713, and 0.1017 inches (0.478, 0.597, 0.749, 0.879, 1.016, 1.146, 1.438, 1.811, and 2.583 mm). The section legs (flanges) are $2^1/_2$ inches (63.5 mm) in length and have 1½-inch-long (38.1mm) by ¼-inch-wide (6.35 mm) vertical slots spaced every 1-inch (25.4 mm) along the length of the member. Figure 1A of this report is a diagram showing detailed dimensions of the track section.

4.2.2 Deep Leg Slotted Track (SDLT): The SDLT section is a cold-formed U-shaped channel which consists of two slotted flanges, perpendicular to the web, formed from cold-formed sheet steel as described in Section 4.2 of this report. The SDLT sections are fabricated to nominal web widths of 2½, 3½, 3⅝, 4, 6, and 8 inches (63.5, 88.9, 92.1, 101.6, 152.4, and 203.2 mm). The sections are formed from steel having design thicknesses of 0.0295, 0.0346, 0.0400, 0.0451, 0.0566, 0.0713, and 0.1017 inches (0.749, 0.879, 1.016, 1.146, 1.438, 1.811, and 2.583 mm). The section legs (flanges) are 3¼ inches (82.6 mm) in length and have 2-inch-long (50.8 mm) by ¼-inch-wide (6.35 mm) vertical slots spaced every 1-inch (25.4 mm) along the length of the member. Figure 1B of this report is a diagram showing detailed dimensions of the track section.

4.2.3 Seismic Drift Track (D): The D section is a cold-formed U-shaped channel which consists of two slotted flanges, perpendicular to the slotted web, formed from cold-formed sheet steel as described in Section 4.2 of this report. The D sections are fabricated to nominal web widths of 2½, 3½, 3⅝, 4, 6, and 8 inches (63.5, 88.9, 92.1, 101.6, 152.4, and 203.2 mm). The sections are formed from steel having design thicknesses of 0.0188, 0.0235, 0.0295, 0.0346, 0.0400, 0.0451, 0.0566, 0.0713, and 0.1017 inches (0.478, 0.597, 0.749, 0.879, 1.016, 1.146, 1.438, 1.811, and 2.583 mm). The section legs (flanges) are 2½ inches (63.5 mm) in length and have 1½-inch-long (38.1 mm) by ¼-inch-wide (6.35 mm) vertical slots spaced every l-inch (25.4 mm) along the length of the member. The sections have 4–inch-long (101.6 mm) slots centered in the web spaced every 12 inches on center to be utilized with the Drift Insert DI. Figure 2A of this report is a diagram showing detailed dimensions of the track section. Figure 2C of this report is a detail of the Drift Insert DI.

4.2.4 Deep Leg Seismic Drift Track (D): The DD section is a cold-formed U-shaped channel which consists of two slotted flanges, perpendicular to the slotted web, formed from cold-formed sheet steel per Section 4.2 of this report. The DD sections are fabricated to nominal web widths of 2½, 3½, 3⅝, 4, 6, and 8 inches (63.5, 88.9, 92.1, 101.6, 152.4, and 203.2 mm). The sections are formed from steel having design thicknesses of 0.0188, 0.0235, 0.0295, 0.0346, 0.0400, 0.0451, 0.0566, 0.0713, and 0.1017 inches (0.478, 0.597, 0.749, 0.879, 1.016, 1.146, 1.438, 1.811, and 2.583 mm). The section legs (flanges) are 3¼ inches (82.6 mm) in length and have 2–inch-long (50.8 mm) by ¼-inch-wide (6.35 mm) vertical slots spaced every 1-inch (25.4 mm) along the length of the member. The section also has 4–inch-long (101.6 mm) slots centered in the web spaced every 12 inches on center (304.8 mm) along the length of the member, to be utilized with the Drift Insert DI. Figure 2B of this report is a diagram showing detailed dimensions of the track section. Figure 2C of this report is a detail of the Drift Insert DI.

4.3 Fasteners: The top of the stud shall be fastened to the Slotted Deflection Track with No. 10 by ¾-inch pan head drill point screws for 33 mil and thicker steel material, and No. 8 by $^9/_{16}$-inch pan head sharp point screws for 28 mil and thinner steel material. Fasteners shall not be attached through the slotted track in a manner that will impair movement.

5.0 IDENTIFICATION

Each track shall have a legible label, stamp or embossment, at a maximum spacing of 96 inches (2438 mm) on center, indicating the Slotted Deflection Track name "SLT" or "SDLT" or Seismic Drift Track "D" and "DD", the manufacturer's name, the minimum base metal thickness (mils), the minimum yield strength, the galvanization coating designation, and the IAPMO Uniform ES Report Number 283. In addition, each pallet of slotted deflection track is identified with the company name, the steel thickness, and the section designation in accordance with Section 2203.1 of the IBC, IAPMO Uniform ES Report Number 283, and the IAPMO Uniform ES Mark of Conformity. Either UES Mark of Conformity may also be used as shown below:

or

IAPMO UES ER-283

6.0 SUBSTANTIATING DATA

Data and test reports from laboratories in compliance with ISO/IEC 17025 in accordance with the Acceptance Criteria for Cold-Formed Steel Framing Members (ICC-ES AC46), approved October 2019.

7.0 STATEMENT OF RECOGNITION

This evaluation report describes the results of research completed by IAPMO Uniform Evaluation Service on SCAFCO Slotted Track to assess conformance to the codes shown in Section 1.0 of this report and serves as documentation of the product certification. Products are manufactured under a quality control program with periodic inspection under the supervision of IAPMO UES.

For additional information about this evaluation report please visit www.uniform-es.org or email us at info@uniform-es.org

TABLE 1A – SLOTTED TRACK AND SEISMIC DRIFT TRACK ALLOWABLE LOADS AND WALL HEIGHTS

Product Thickness	MAXIMUM WALL HEIGHTS (ft)												Allowable Lateral Load (lbs)
	Stud Spacing on Center (in)												
	12	16	24	12	16	24	12	16	24	12	16	24	
	Uniform Lateral Load												
	5 psf			10 psf			20 psf			40 psf			
D20	14.8	11.1	-	-	-	-	-	-	-	-	-	-	37
30EQD	22.0	16.5	11.0	11.0	8.3	-	-	-	-	-	-	-	55
33EQS	36.0	27.0	18.0	18.0	13.5	9.0	9.0	-	-	-	-	-	90
33mil	42.4	31.8	21.2	21.2	15.9	10.6	10.6	-	-	-	-	-	106
43EQS	69.2	51.9	34.6	34.6	26.0	17.3	17.3	13.0	8.7	-	-	-	173
43mil	76.4	57.3	38.2	38.2	28.7	19.1	19.1	14.3	9.6	9.6	-	-	191
54mil	151.6	113.7	75.8	75.8	56.9	37.9	37.9	28.4	19.0	19.0	14.2	9.5	379
68mil	231.6	173.7	115.8	115.8	86.9	57.9	57.9	43.4	29.0	29.0	21.8	14.5	568
97mil	502.8	377.2	251.4	251.4	188.6	125.7	125.7	94.3	62.9	62.9	47.3	31.4	1257

TABLE 1B – DEEP LEG SLOTTED TRACK/SEISMIC DRIFT TRACK ALLOWABLE LOADS AND WALL HEIGHTS

Product Thickness	MAXIMUM WALL HEIGHTS (ft)												Allowable Lateral Load (lbs)
	Stud Spacing on Center (in)												
	12	16	24	12	16	24	12	16	24	12	16	24	
	Uniform Lateral Load												
	5 psf			10 psf			20 psf			40 psf			
33EQS	14.0	10.5	-	-	-	-	-	-	-	-	-	-	35
33mil	18.8	14.1	9.4	9.4	-	-	-	-	-	-	-	-	47
43EQS	28.4	21.3	14.2	14.2	10.7	-	-	-	-	-	-	-	71
43mil	36.8	27.6	18.4	18.4	13.8	9.2	9.2	-	-	-	-	-	92
54mil	71.6	53.7	35.8	35.8	26.9	17.9	17.9	13.4	9.0	9.0	-	-	179
68mil	119.6	89.7	59.8	59.8	44.9	29.9	29.9	22.4	15.0	15.0	11.2	-	299
97mil	282.8	212.2	141.4	141.4	106.1	70.7	70.7	53.0	35.4	35.4	26.6	17.7	707

Notes to Tables 2A, 2B, 3A, and 3B:

1. Web-height to thickness ratio exceeds 200. Web Stiffeners are required at all support points and concentrated loads.
2. Gross properties based on the full section, not reduced for flange slots.
3. Effective properties based on a compression flange of ¾ inch long (before local buckling reductions) and a tension flange of 1½ inch long.
4. For deflection calculations, effective I_{xx} shall be used.
5. All properties based on unpunched webs.
6. Web depth is equal to the nominal depth plus two times the design thickness, plus the inside bend radius.
7. X-X properties are 'strong-axis' properties, Y-Y properties are about the 'weak-axis.'
8. Effective properties based on AISI S100.
9. For **SI:** 1 inch = 25.4 mm, 1 ksi = 6.8948 kPa, 1 lb/ft = 14.594 N/m.

TABLE 2A – SCAFCO STANDARD SLOTTED TRACK (SLT) SECTION PROPERTIES

Member Designation	F_y (ksi)	Minimum Thickness (in)	Design Thickness (in)	Gross Area (in^2)	Gross Weight (lb/ft)	Gross I_x (in^4)	Gross R_x (in)	Gross I_y (in^4)	Gross R_y (in)	Effective S_{xx} (in^3)	Effective I_{xx} (in^4)
250SLT250-D20	57	0.0179	0.0188	0.141	0.48	0.184	1.141	0.097	0.830	0.032	0.062
250SLT250-30EQD	57	0.0223	0.0235	0.176	0.60	0.23	1.142	0.121	0.829	0.046	0.083
250SLT250-33EQS	57	0.0280	0.0295	0.221	0.75	0.289	1.143	0.152	0.828	0.065	0.110
250SLT250-33	33	0.0329	0.0346	0.259	0.88	0.339	1.144	0.178	0.827	0.087	0.129
250SLT250-43EQS	57	0.0380	0.0400	0.300	1.02	0.393	1.145	0.205	0.826	0.100	0.149
250SLT250-43	33	0.0428	0.0451	0.338	1.15	0.443	1.146	0.230	0.826	0.163	0.108
250SLT250-54	50	0.0538	0.0566	0.424	1.44	0.565	1.155	0.287	0.824	0.141	0.213
250SLT250-68	50	0.0677	0.0713	0.534	1.82	0.728	1.168	0.360	0.821	0.177	0.273
250SLT250-97	50	0.0966	0.1017	0.761	2.59	1.086	1.195	0.506	0.815	0.249	0.399
350SLT250-D20	57	0.0179	0.0188	0.160	0.54	0.372	1.526	0.109	0.824	0.046	0.129
350SLT250-30EQD	57	0.0223	0.0235	0.200	0.68	0.466	1.527	0.135	0.823	0.067	0.175
350SLT250-33EQS	57	0.028	0.0295	0.251	0.85	0.585	1.528	0.169	0.822	0.096	0.235
350SLT250-33	33	0.0329	0.0346	0.294	1.00	0.687	1.528	0.198	0.821	0.138	0.286
350SLT250-43EQS	57	0.0380	0.0400	0.340	1.16	0.794	1.529	0.229	0.820	0.153	0.331
350SLT250-43	33	0.0428	0.0451	0.383	1.30	0.896	1.530	0.257	0.819	0.362	0.178
350SLT250-54	50	0.0538	0.0566	0.480	1.63	1.137	1.538	0.321	0.817	0.232	0.471
350SLT250-68	50	0.0677	0.0713	0.605	2.06	1.454	1.550	0.401	0.814	0.290	0.598
350SLT250-97	50	0.0966	0.1017	0.862	2.93	2.139	1.575	0.563	0.808	0.409	0.867
362SLT250-D20	57	0.0179	0.0188	0.162	0.55	0.401	1.573	0.110	0.823	0.048	0.140
362SLT250-30EQD	57	0.0223	0.0235	0.203	0.69	0.502	1.573	0.137	0.822	0.069	0.190
362SLT250-33EQS	57	0.028	0.0295	0.254	0.87	0.630	1.574	0.171	0.821	0.100	0.254
362SLT250-33	33	0.0329	0.0346	0.298	1.01	0.740	1.575	0.200	0.820	0.144	0.312
362SLT250-43EQS	57	0.0380	0.0400	0.345	1.17	0.856	1.576	0.231	0.819	0.159	0.359
362SLT250-43	33	0.0428	0.0451	0.389	1.32	0.966	1.577	0.260	0.818	0.395	0.188
362SLT250-54	50	0.0538	0.0566	0.487	1.66	1.224	1.585	0.324	0.816	0.244	0.512
362SLT250-68	50	0.0677	0.0713	0.614	2.09	1.565	1.597	0.406	0.813	0.306	0.650
362SLT250-97	50	0.0966	0.1017	0.875	2.98	2.300	1.621	0.570	0.807	0.432	0.942
400SLT250-D20	57	0.0179	0.0188	0.169	0.58	0.496	1.712	0.113	0.818	0.053	0.173
400SLT250-30EQD	57	0.0223	0.0235	0.212	0.72	0.620	1.712	0.141	0.817	0.077	0.236
400SLT250-33EQS	57	0.028	0.0295	0.265	0.90	0.779	1.713	0.177	0.816	0.111	0.317
400SLT250-33	33	0.0329	0.0346	0.311	1.06	0.914	1.714	0.207	0.815	0.162	0.396
400SLT250-43EQS	57	0.0380	0.0400	0.360	1.22	1.058	1.715	0.238	0.814	0.179	0.450
400SLT250-43	33	0.0428	0.0451	0.405	1.38	1.193	1.715	0.268	0.813	0.502	0.219
400SLT250-54	50	0.0538	0.0566	0.509	1.73	1.511	1.723	0.335	0.811	0.284	0.650
400SLT250-68	50	0.0677	0.0713	0.641	2.18	1.928	1.735	0.418	0.808	0.356	0.825
400SLT250-97	50	0.0966	0.1017	0.913	3.11	2.823	1.758	0.587	0.802	0.502	1.192
600SLT250-D20	57	0.0179	0.0188	0.207	0.70	1.214	2.422	0.128	0.786	0.081	0.420
600SLT250-30EQD	57	0.0223	0.0235	0.259	0.88	1.518	2.423	0.159	0.785	0.118	0.579
600SLT250-33EQS	57	0.028	0.0295	0.324	1.10	1.906	2.424	0.200	0.784	0.172	0.789
600SLT250-33	33	0.0329	0.0346	0.380	1.29	2.236	2.424	0.233	0.783	0.260	1.021
600SLT250-43EQS	57	0.0380	0.0400	0.440	1.50	2.585	2.425	0.269	0.782	0.283	1.145
600SLT250-43	33	0.0428	0.0451	0.496	1.69	2.916	2.425	0.303	0.781	1.402	0.378
600SLT250-54	50	0.0538	0.0566	0.622	2.12	3.678	2.432	0.377	0.779	0.478	1.769
600SLT250-68	50	0.0677	0.0713	0.783	2.67	4.670	2.442	0.472	0.776	0.655	2.266
600SLT250-97	50	0.0966	0.1017	1.116	3.80	6.767	2.462	0.662	0.770	0.960	3.253
800SLT250-33EQS	57	0.028	0.0295	0.383	1.30	3.681	3.098	0.215	0.749	0.233	1.504
800SLT250-33	33	0.0329	0.0346	0.450	1.53	4.318	3.099	0.252	0.748	0.358	1.994
800SLT250-43EQS	57	0.0380	0.0400	0.520	1.77	4.992	3.099	0.290	0.747	0.387	2.216
800SLT250-43	33	0.0428	0.0451	0.586	1.99	5.629	3.100	0.326	0.746	2.800	0.530
800SLT250-54	50	0.0538	0.0566	0.735	2.50	7.090	3.106	0.407	0.744	0.671	3.522
800SLT250-68	50	0.0677	0.0713	0.926	3.15	8.978	3.114	0.509	0.741	0.943	4.675
800SLT250-97	50	0.0966	0.1017	1.320	4.49	12.944	3.132	0.713	0.735	1.536	6.835

See Page 5 of this report for Table Notes

TABLE 2B – SCAFCO DEEP LEG SLOTTED TRACK (SDLT) SECTION PROPERTIES

Member Designation	F_y (ksi)	Minimum Thickness (in)	Design Thickness (in)	Gross Area (in^2)	Gross Weight (lb/ft)	Gross I_x (in^4)	Gross R_x (in)	Gross I_y (in^4)	Gross R_y (in)	Effective S_{xx} (in^3)	Effective I_{xx} (in^4)
250SDLT325-33EQS	57	0.028	0.0295	0.265	0.90	0.364	1.171	0.307	1.075	0.075	0.123
250SDLT325-33	33	0.0329	0.0346	0.311	1.06	0.428	1.172	0.359	1.074	0.098	0.157
250SDLT325-43EQS	57	0.0380	0.0400	0.360	1.22	0.495	1.173	0.414	1.073	0.110	0.178
250SDLT325-43	33	0.0428	0.0451	0.406	1.38	0.559	1.174	0.466	1.073	0.133	0.193
250SDLT325-54	50	0.0538	0.0566	0.509	1.73	0.713	1.184	0.583	1.071	0.174	0.263
250SDLT325-68	50	0.0677	0.0713	0.641	2.18	0.920	1.198	0.731	1.068	0.221	0.337
250SDLT325-97	50	0.0966	0.1017	0.913	3.11	1.376	1.227	1.032	1.063	0.314	0.497
350SDLT325-33EQS	57	0.028	0.0295	0.295	1.00	0.729	1.572	0.343	1.078	0.101	0.263
350SDLT325-33	33	0.0329	0.0346	0.346	1.18	0.856	1.573	0.401	1.077	0.153	0.340
350SDLT325-43EQS	57	0.0380	0.0400	0.400	1.36	0.990	1.574	0.463	1.076	0.165	0.387
350SDLT325-43	33	0.0428	0.0451	0.451	1.533	1.117	1.575	0.521	1.075	0.211	0.419
350SDLT325-54	50	0.0538	0.0566	0.565	1.92	1.418	1.584	0.651	1.073	0.278	0.565
350SDLT325-68	50	0.0677	0.0713	0.712	2.42	1.816	1.597	0.816	1.071	0.352	0.720
350SDLT325-97	50	0.0966	0.1017	1.015	3.45	2.676	1.624	1.151	1.065	0.499	1.047
362SDLT325-33EQS	57	0.028	0.0295	0.299	1.02	0.785	1.621	0.347	1.077	0.105	0.285
362SDLT325-33	33	0.0329	0.0346	0.350	1.19	0.921	1.622	0.406	1.076	0.160	0.369
362SDLT325-43EQS	57	0.0380	0.0400	0.405	1.38	1.066	1.623	0.468	1.076	0.172	0.421
362SDLT325-43	33	0.0428	0.0451	0.456	1.552	1.203	1.624	0.527	1.075	0.222	0.455
362SDLT325-54	50	0.0538	0.0566	0.572	1.95	1.526	1.633	0.659	1.073	0.292	0.613
362SDLT325-68	50	0.0677	0.0713	0.721	2.45	1.952	1.646	0.825	1.070	0.370	0.780
362SDLT325-97	50	0.0966	0.1017	1.027	3.50	2.873	1.672	1.164	1.064	0.524	1.135
400SDLT325-33EQS	57	0.028	0.0295	0.310	1.05	0.966	1.766	0.358	1.075	0.117	0.354
400SDLT325-33	33	0.0329	0.0346	0.363	1.24	1.134	1.767	0.419	1.074	0.180	0.466
400SDLT325-43EQS	57	0.0380	0.0400	0.420	1.43	1.311	1.768	0.484	1.073	0.193	0.527
400SDLT325-43	33	0.0428	0.0451	0.473	1.61	1.48	1.768	0.544	1.073	0.256	0.575
400SDLT325-54	50	0.0538	0.0566	0.594	2.02	1.875	1.777	0.680	1.070	0.337	0.773
400SDLT325-68	50	0.0677	0.0713	0.748	2.54	2.395	1.790	0.852	1.068	0.427	0.982
400SDLT325-97	50	0.0966	0.1017	1.066	3.63	3.514	1.816	1.202	1.062	0.604	1.424
600SDLT325-33EQS	57	0.028	0.0295	0.369	1.25	2.319	2.508	0.407	1.051	0.180	0.873
600SDLT325-33	33	0.0329	0.0346	0.432	1.47	2.720	2.508	0.477	1.050	0.285	1.191
600SDLT325-43EQS	57	0.0380	0.0400	0.500	1.70	3.146	2.509	0.550	1.049	0.303	1.325
600SDLT325-43	33	0.0428	0.0451	0.563	1.917	3.548	2.51	0.619	1.048	0.441	1.561
600SDLT325-54	50	0.0538	0.0566	0.707	2.41	4.479	2.517	0.773	1.046	0.557	2.038
600SDLT325-68	50	0.0677	0.0713	0.890	3.03	5.691	2.528	0.969	1.043	0.761	2.608
600SDLT325-97	50	0.0966	0.1017	1.269	4.32	8.259	2.551	1.365	1.037	1.112	3.752
800SDLT325-33EQS	57	0.028	0.0295	0.428	1.46	4.409	3.211	0.443	1.018	0.244	1.655
800SDLT325-33	33	0.0329	0.0346	0.502	1.71	5.172	3.211	0.519	1.017	0.391	2.308
800SDLT325-43EQS	57	0.0380	0.0400	0.580	1.97	5.980	3.212	0.598	1.016	0.412	2.550
800SDLT325-43	33	0.0428	0.0451	0.654	2.224	6.743	3.212	0.673	1.015	0.612	3.161
800SDLT325-54	50	0.0538	0.0566	0.820	2.79	8.497	3.219	0.841	1.013	0.775	3.996
800SDLT325-68	50	0.0677	0.0713	1.033	3.51	10.767	3.229	1.053	1.010	1.083	5.269
800SDLT325-97	50	0.0966	0.1017	1.472	5.01	15.542	3.249	1.483	1.004	1.739	7.704

See Page 5 of this report for Table Notes

Table 3A – SCAFCO SEISMIC DRIFT TRACK (D) SECTION PROPERTIES

Member Designation	F_y (ksi)	Minimum Thickness (in)	Design Thickness (in)	Gross Area (in^2)	Gross Weight (lb/ft)	Gross I_x (in^4)	Gross R_x (in)	Gross I_y (in^4)	Gross R_y (in)	Effective S_{xx} (in^3)	Effective I_{xx} (in^4)
250D250-D20	57	0.0179	0.0188	0.141	0.48	0.184	1.141	0.097	0.830	0.032	0.062
250D250-30EQD	57	0.0223	0.0235	0.176	0.60	0.23	1.142	0.121	0.829	0.046	0.083
250D250-33EQS	57	0.0280	0.0295	0.221	0.75	0.289	1.143	0.152	0.828	0.065	0.110
250D250-33	33	0.0329	0.0346	0.259	0.88	0.339	1.144	0.178	0.827	0.087	0.129
250D250-43EQS	57	0.0380	0.0400	0.300	1.02	0.393	1.145	0.205	0.826	0.100	0.149
250D250-43	33	0.0428	0.0451	0.338	1.15	0.443	1.146	0.230	0.826	0.163	0.108
250D250-54	50	0.0538	0.0566	0.424	1.44	0.565	1.155	0.287	0.824	0.141	0.213
250D250-68	50	0.0677	0.0713	0.534	1.82	0.728	1.168	0.360	0.821	0.177	0.273
250D250-97	50	0.0966	0.1017	0.761	2.59	1.086	1.195	0.506	0.815	0.249	0.399
350D250-D20	57	0.0179	0.0188	0.160	0.54	0.372	1.526	0.109	0.824	0.046	0.129
350D250-30EQD	57	0.0223	0.0235	0.200	0.68	0.466	1.527	0.135	0.823	0.067	0.175
350D250-33EQS	57	0.028	0.0295	0.251	0.85	0.585	1.528	0.169	0.822	0.096	0.235
350D250-33	33	0.0329	0.0346	0.294	1.00	0.687	1.528	0.198	0.821	0.138	0.286
350D250-43EQS	57	0.0380	0.0400	0.340	1.16	0.794	1.529	0.229	0.820	0.153	0.331
350D250-43	33	0.0428	0.0451	0.383	1.30	0.896	1.530	0.257	0.819	0.362	0.178
350D250-54	50	0.0538	0.0566	0.480	1.63	1.137	1.538	0.321	0.817	0.232	0.471
350D250-68	50	0.0677	0.0713	0.605	2.06	1.454	1.550	0.401	0.814	0.290	0.598
350D250-97	50	0.0966	0.1017	0.862	2.93	2.139	1.575	0.563	0.808	0.409	0.867
362D250-D20	57	0.0179	0.0188	0.162	0.55	0.401	1.573	0.110	0.823	0.048	0.140
362D250-30EQD	57	0.0223	0.0235	0.203	0.69	0.502	1.573	0.137	0.822	0.069	0.190
362D250-33EQS	57	0.028	0.0295	0.254	0.87	0.630	1.574	0.171	0.821	0.100	0.254
362D250-33	33	0.0329	0.0346	0.298	1.01	0.740	1.575	0.200	0.820	0.144	0.312
362D250-43EQS	57	0.0380	0.0400	0.345	1.17	0.856	1.576	0.231	0.819	0.159	0.359
362D250-43	33	0.0428	0.0451	0.389	1.32	0.966	1.577	0.260	0.818	0.395	0.188
362D250-54	50	0.0538	0.0566	0.487	1.66	1.224	1.585	0.324	0.816	0.244	0.512
362D250-68	50	0.0677	0.0713	0.614	2.09	1.565	1.597	0.406	0.813	0.306	0.650
362D250-97	50	0.0966	0.1017	0.875	2.98	2.300	1.621	0.570	0.807	0.432	0.942
400D250-D20	57	0.0179	0.0188	0.169	0.58	0.496	1.712	0.113	0.818	0.053	0.173
400D250-30EQD	57	0.0223	0.0235	0.212	0.72	0.620	1.712	0.141	0.817	0.077	0.236
400D250-33EQS	57	0.028	0.0295	0.265	0.90	0.779	1.713	0.177	0.816	0.111	0.317
400D250-33	33	0.0329	0.0346	0.311	1.06	0.914	1.714	0.207	0.815	0.162	0.396
400D250-43EQS	57	0.0380	0.0400	0.360	1.22	1.058	1.715	0.238	0.814	0.179	0.450
400D250-43	33	0.0428	0.0451	0.405	1.38	1.193	1.715	0.268	0.813	0.502	0.219
400D250-54	50	0.0538	0.0566	0.509	1.73	1.511	1.723	0.335	0.811	0.284	0.650
400D250-68	50	0.0677	0.0713	0.641	2.18	1.928	1.735	0.418	0.808	0.356	0.825
400D250-97	50	0.0966	0.1017	0.913	3.11	2.823	1.758	0.587	0.802	0.502	1.192
600D250-D20	57	0.0179	0.0188	0.207	0.70	1.214	2.422	0.128	0.786	0.081	0.420
600D250-30EQD	57	0.0223	0.0235	0.259	0.88	1.518	2.423	0.159	0.785	0.118	0.579
600D250-33EQS	57	0.028	0.0295	0.324	1.10	1.906	2.424	0.200	0.784	0.172	0.789
600D250-33	33	0.0329	0.0346	0.380	1.29	2.236	2.424	0.233	0.783	0.260	1.021
600D250-43EQS	57	0.0380	0.0400	0.440	1.50	2.585	2.425	0.269	0.782	0.283	1.145
600D250-43	33	0.0428	0.0451	0.496	1.69	2.916	2.425	0.303	0.781	1.402	0.378
600D250-54	50	0.0538	0.0566	0.622	2.12	3.678	2.432	0.377	0.779	0.478	1.769
600D250-68	50	0.0677	0.0713	0.783	2.67	4.670	2.442	0.472	0.776	0.655	2.266
600D250-97	50	0.0966	0.1017	1.116	3.80	6.767	2.462	0.662	0.770	0.960	3.253
800D250-33EQS	57	0.028	0.0295	0.383	1.30	3.681	3.098	0.215	0.749	0.233	1.504
800D250-33	33	0.0329	0.0346	0.450	1.53	4.318	3.099	0.252	0.748	0.358	1.994
800D250-43EQS	57	0.0380	0.0400	0.520	1.77	4.992	3.099	0.290	0.747	0.387	2.216
800D250-43	33	0.0428	0.0451	0.586	1.99	5.629	3.100	0.326	0.746	2.800	0.530
800D250-54	50	0.0538	0.0566	0.735	2.50	7.090	3.106	0.407	0.744	0.671	3.522
800D250-68	50	0.0677	0.0713	0.926	3.15	8.978	3.114	0.509	0.741	0.943	4.675
800D250-97	50	0.0966	0.1017	1.320	4.49	12.944	3.132	0.713	0.735	1.536	6.835

See Page 5 of this report for Table Notes

TABLE 3B – SCAFCO DEEP LEG SEISMIC DRIFT TRACK (DD) SECTION PROPERTIES

Member Designation	Fy (ksi)	Minimum Thickness (in)	Design Thickness (in)	Gross Area (in^2)	Gross Weight (lb/ft)	Gross Ix (in^4)	Gross Rx (in)	Gross Iy (in^4)	Gross Ry (in)	Effective Sxx (in^3)	Effective Ixx (in^4)
250DD325-33EQS	57	0.028	0.0295	0.265	0.90	0.364	1.171	0.307	1.075	0.075	0.123
250DD325-33	33	0.0329	0.0346	0.311	1.06	0.428	1.172	0.359	1.074	0.098	0.157
250DD325-43EQS	57	0.0380	0.0400	0.360	1.22	0.495	1.173	0.414	1.073	0.110	0.178
250DD325-43	33	0.0428	0.0451	0.406	1.38	0.559	1.174	0.466	1.073	0.133	0.193
250DD325-54	50	0.0538	0.0566	0.509	1.73	0.713	1.184	0.583	1.071	0.174	0.263
250DD325-68	50	0.0677	0.0713	0.641	2.18	0.920	1.198	0.731	1.068	0.221	0.337
250DD325-97	50	0.0966	0.1017	0.913	3.11	1.376	1.227	1.032	1.063	0.314	0.497
350DD325-33EQS	57	0.028	0.0295	0.295	1.00	0.729	1.572	0.343	1.078	0.101	0.263
350DD325-33	33	0.0329	0.0346	0.346	1.18	0.856	1.573	0.401	1.077	0.153	0.340
350DD325-43EQS	57	0.0380	0.0400	0.400	1.36	0.990	1.574	0.463	1.076	0.165	0.387
350DD325-43	33	0.0428	0.0451	0.451	1.533	1.117	1.575	0.521	1.075	0.211	0.419
350DD325-54	50	0.0538	0.0566	0.565	1.92	1.418	1.584	0.651	1.073	0.278	0.565
350DD325-68	50	0.0677	0.0713	0.712	2.42	1.816	1.597	0.816	1.071	0.352	0.720
350DD325-97	50	0.0966	0.1017	1.015	3.45	2.676	1.624	1.151	1.065	0.499	1.047
362DD325-33EQS	57	0.028	0.0295	0.299	1.02	0.785	1.621	0.347	1.077	0.105	0.285
362DD325-33	33	0.0329	0.0346	0.350	1.19	0.921	1.622	0.406	1.076	0.160	0.369
362DD325-43EQS	57	0.0380	0.0400	0.405	1.38	1.066	1.623	0.468	1.076	0.172	0.421
362DD325-43	33	0.0428	0.0451	0.456	1.552	1.203	1.624	0.527	1.075	0.222	0.455
362DD325-54	50	0.0538	0.0566	0.572	1.95	1.526	1.633	0.659	1.073	0.292	0.613
362DD325-68	50	0.0677	0.0713	0.721	2.45	1.952	1.646	0.825	1.070	0.370	0.780
362DD325-97	50	0.0966	0.1017	1.027	3.50	2.873	1.672	1.164	1.064	0.524	1.135
400DD325-33EQS	57	0.028	0.0295	0.310	1.05	0.966	1.766	0.358	1.075	0.117	0.354
400DD325-33	33	0.0329	0.0346	0.363	1.24	1.134	1.767	0.419	1.074	0.180	0.466
400DD325-43EQS	57	0.0380	0.0400	0.420	1.43	1.311	1.768	0.484	1.073	0.193	0.527
400DD325-43	33	0.0428	0.0451	0.473	1.61	1.48	1.768	0.544	1.073	0.256	0.575
400DD325-54	50	0.0538	0.0566	0.594	2.02	1.875	1.777	0.680	1.070	0.337	0.773
400DD325-68	50	0.0677	0.0713	0.748	2.54	2.395	1.790	0.852	1.068	0.427	0.982
400DD325-97	50	0.0966	0.1017	1.066	3.63	3.514	1.816	1.202	1.062	0.604	1.424
600DD325-33EQS	57	0.028	0.0295	0.369	1.25	2.319	2.508	0.407	1.051	0.180	0.873
600DD325-33	33	0.0329	0.0346	0.432	1.47	2.720	2.508	0.477	1.050	0.285	1.191
600DD325-43EQS	57	0.0380	0.0400	0.500	1.70	3.146	2.509	0.550	1.049	0.303	1.325
600DD325-43	33	0.0428	0.0451	0.563	1.917	3.548	2.51	0.619	1.048	0.441	1.561
600DD325-54	50	0.0538	0.0566	0.707	2.41	4.479	2.517	0.773	1.046	0.557	2.038
600DD325-68	50	0.0677	0.0713	0.890	3.03	5.691	2.528	0.969	1.043	0.761	2.608
600DD325-97	50	0.0966	0.1017	1.269	4.32	8.259	2.551	1.365	1.037	1.112	3.752
800DD325-33EQS	57	0.028	0.0295	0.428	1.46	4.409	3.211	0.443	1.018	0.244	1.655
800DD325-33	33	0.0329	0.0346	0.502	1.71	5.172	3.211	0.519	1.017	0.391	2.308
800DD325-43EQS	57	0.0380	0.0400	0.580	1.97	5.980	3.212	0.598	1.016	0.412	2.550
800DD325-43	33	0.0428	0.0451	0.654	2.224	6.743	3.212	0.673	1.015	0.612	3.161
800DD325-54	50	0.0538	0.0566	0.820	2.79	8.497	3.219	0.841	1.013	0.775	3.996
800DD325-68	50	0.0677	0.0713	1.033	3.51	10.767	3.229	1.053	1.010	1.083	5.269
800DD325-97	50	0.0966	0.1017	1.472	5.01	15.542	3.249	1.483	1.004	1.739	7.704

See Page 5 of this report for Table Notes

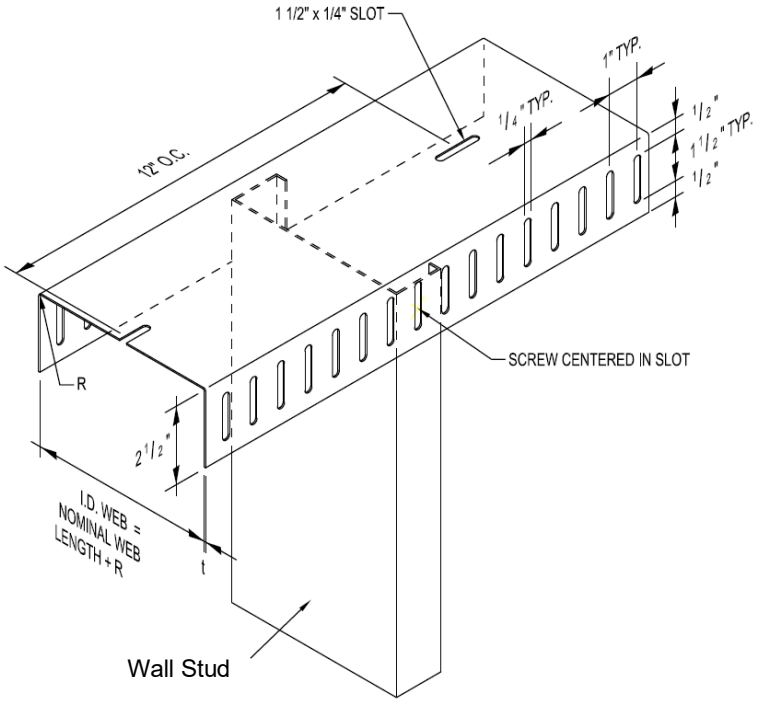

FIGURE 1A – SLOTTED TRACK (SLT)

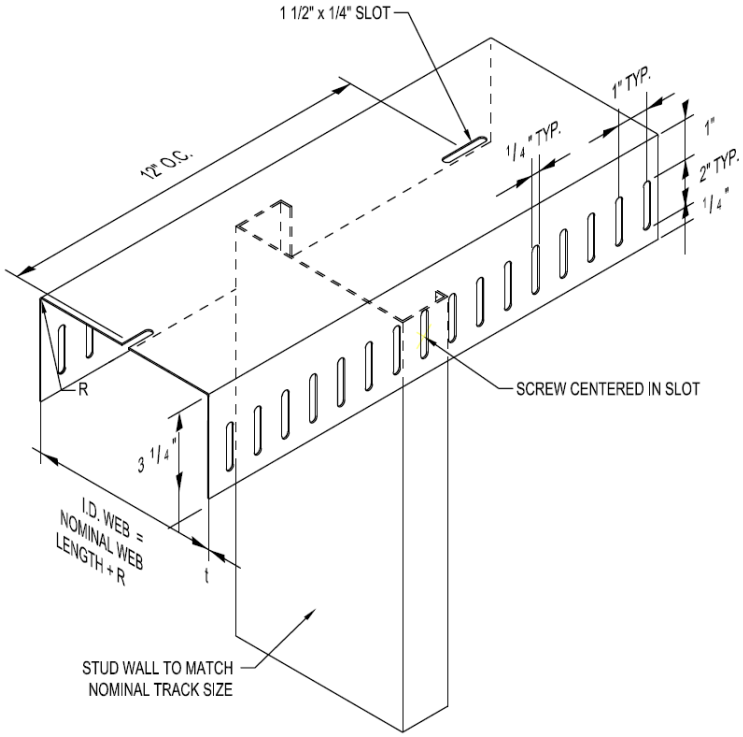

FIGURE 1B – DEEP LEG SLOTTED TRACK (SDLT)

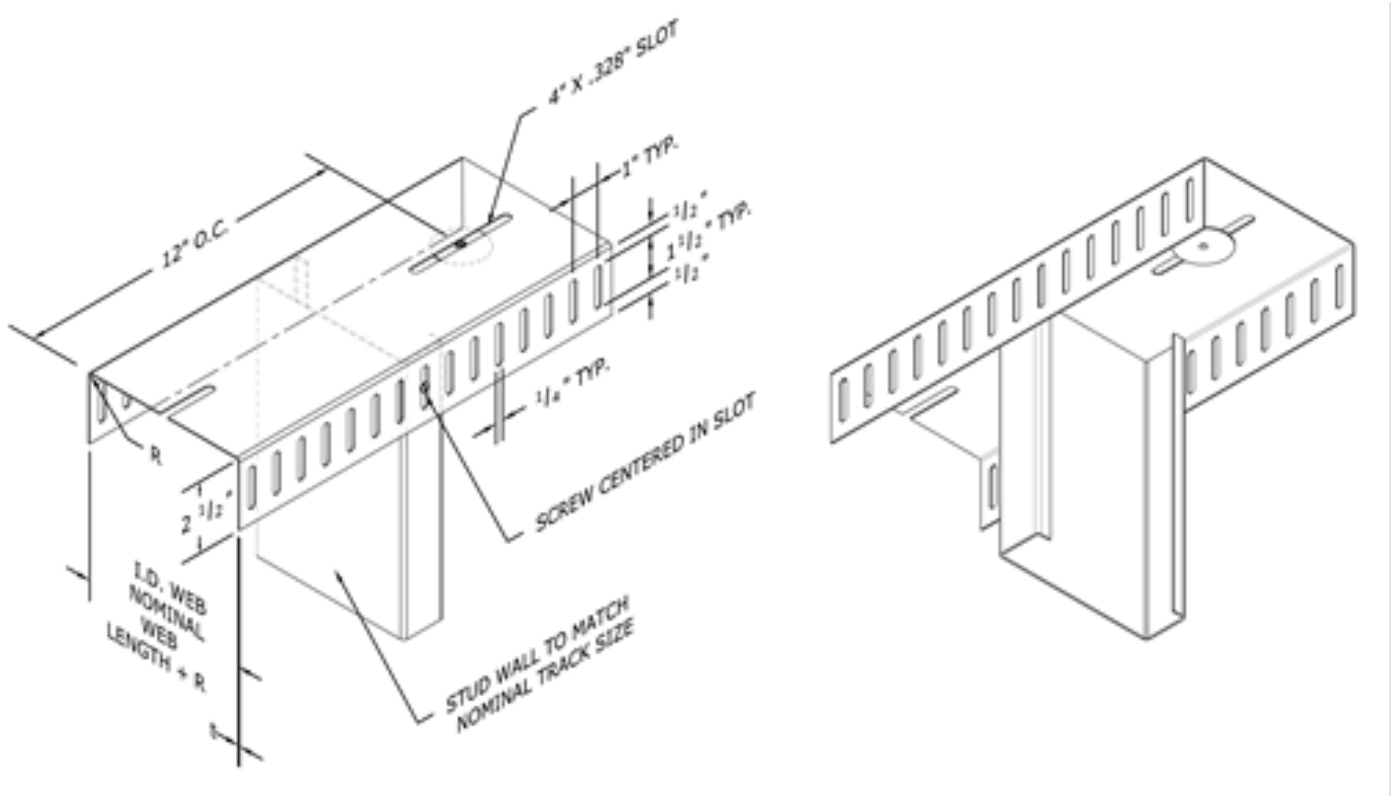

FIGURE 2A – SEISMIC DRIFT TRACK (D)

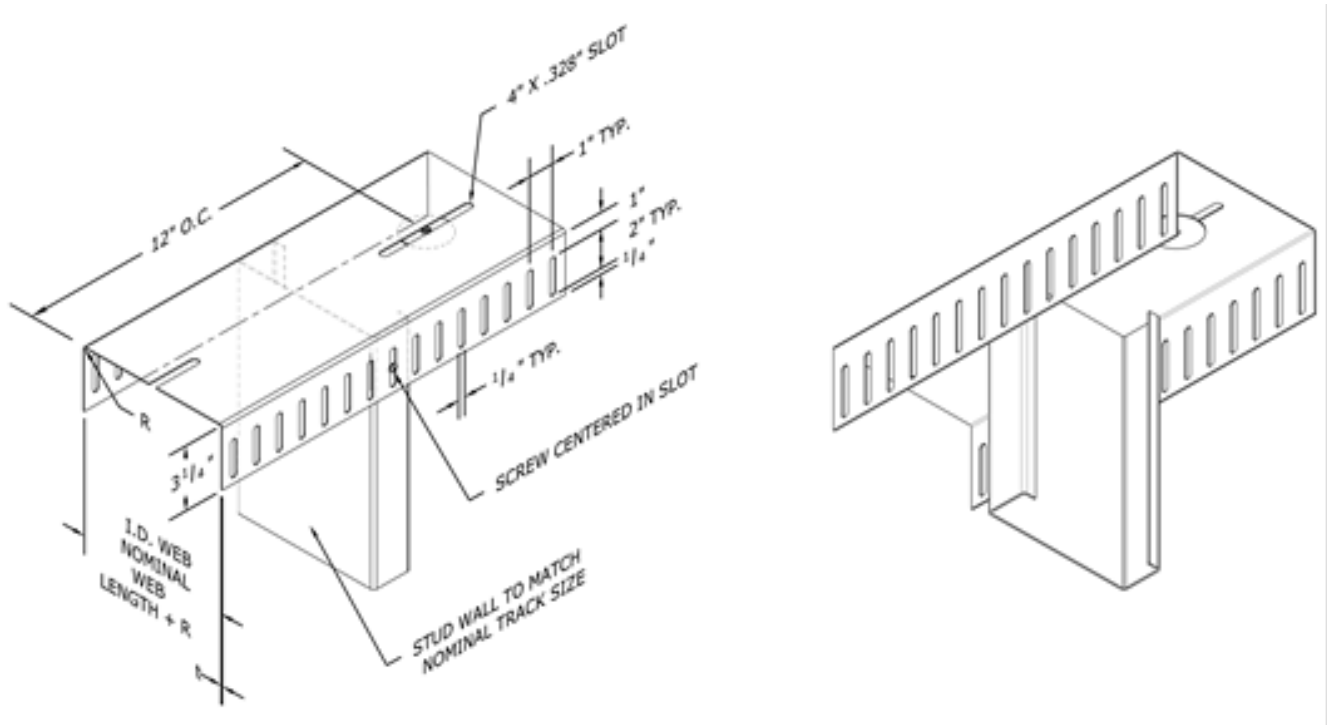

FIGURE 2B - DEEP LEG SEISMIC DRIFT TRACK (DD)

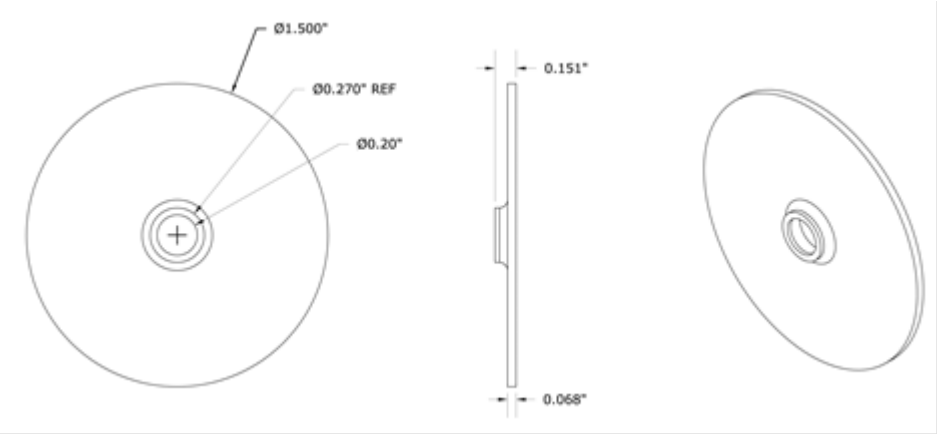

FIGURE 2C - SEISMIC DRIFT TRACK INSERT (DI)

CALIFORNIA SUPPLEMENT

SCAFCO STEEL STUD MANUFACTURING CO.
2800 E. Main Ave.
P. O. Box 3949
Spokane, Washington 99220
(509) 343-9000
www.SCAFCO.com

ADDITIONAL MANUFACTURERS

Quail Run Building Materials
2102 W. Lone Cactus Drive
Phoenix, AZ 85027
(602) 269-2316
www.qrbm.com

United Metal Products
234 North Sherman Avenue
Corona, CA 92882
(951) 739-9535
www.unitedmetalproducts.info

Consolidated Fabricators Corp.
8584 Mulberry Ave.
Fontana, CA 92335
(909) 770/8920
http://www.con-fab.com/

Telling Industries, LLC
1050 Kennedy Road
Windsor, CT 06095
www.tellingindustries.com

Telling Industries, LLC
2105 Larrick Rd.
Cambridge, OH 73725
www.tellingindustries.com

Telling Industries, LLC
1400 Southwire Drive
Osceola, AR 72370
www.tellingindustries.com

Telling Industries, LLC
1200 W Martin Luther King Blvd.
Plant City, FL 33563
(440) 974-3370
www.tellingindustries.com

Steel Construction Systems
11250 Astronaut Boulevard
Orlando, FL 32837
www.steelconsystems.com

SLOTTED STEEL TRACK FOR INTERIOR AND EXTERIOR WALLS (SLT, SDLT) AND SEISMIC DRIFT TRACK FOR INTERIOR AND EXTERIOR WALLS (D, DD)

CSI Division: 05 – METALS

CSI Section: 05 40 00 – Cold-Formed Metal Framing

1.0 RECOGNITION

The SCAFCO Slotted Track recognized as evaluated and represented in IAPMO UES Evaluation Report ER-283 and with changes as noted in this supplement is a satisfactory alternative for use in buildings built under the following codes (and regulations):

- 2019 California Building Code (CBC)

2.0 LIMITATIONS

Use of the SCAFCO Slotted Track when installed, designed, and recognized in this report are subject to the limitations stated in Evaluation Report ER-283 and the following additional limitation:

Design and Installation shall be in accordance with ER-283 and Chapters 22 of the CBC, as applicable.

This supplement expires concurrently with ER-283.

For additional information about this evaluation report please visit www.uniform-es.org or email us at info@uniform-es.org